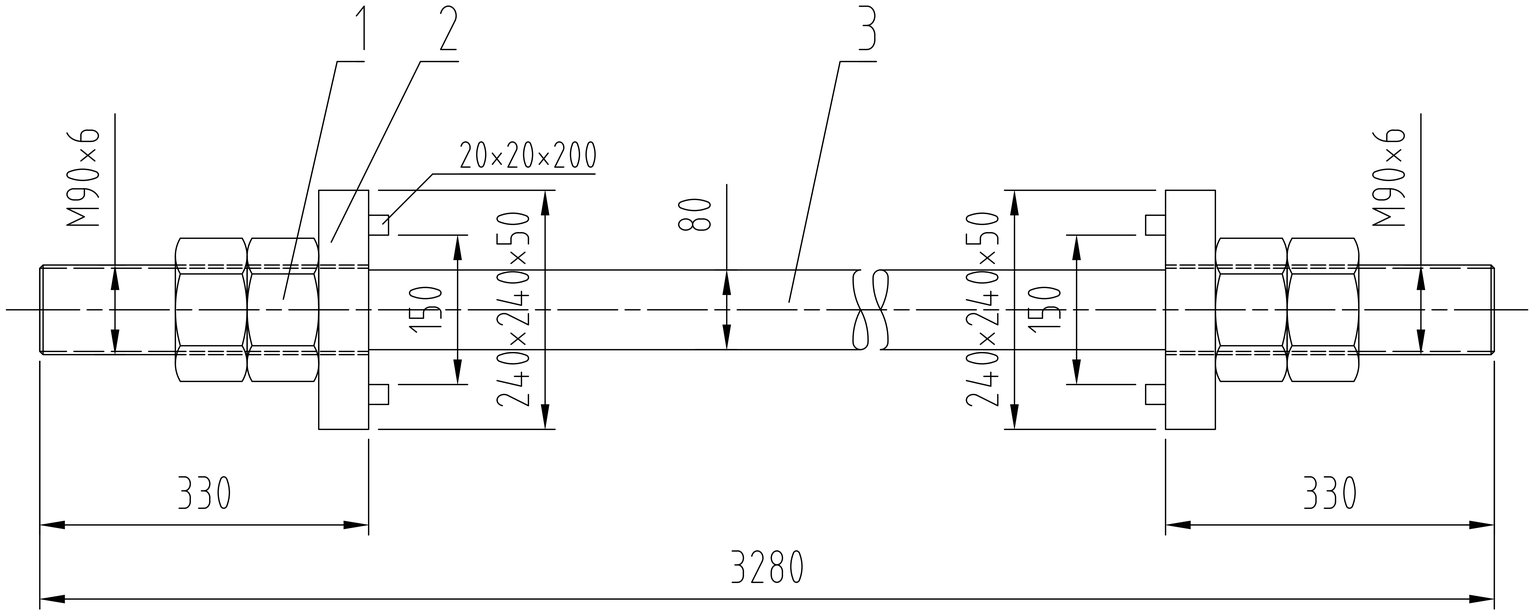

Nut

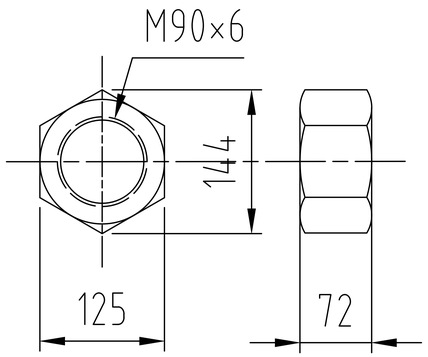

Anchor plate

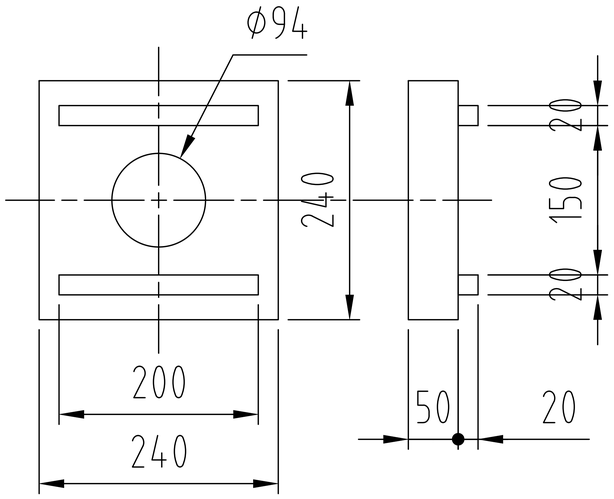

Rod1

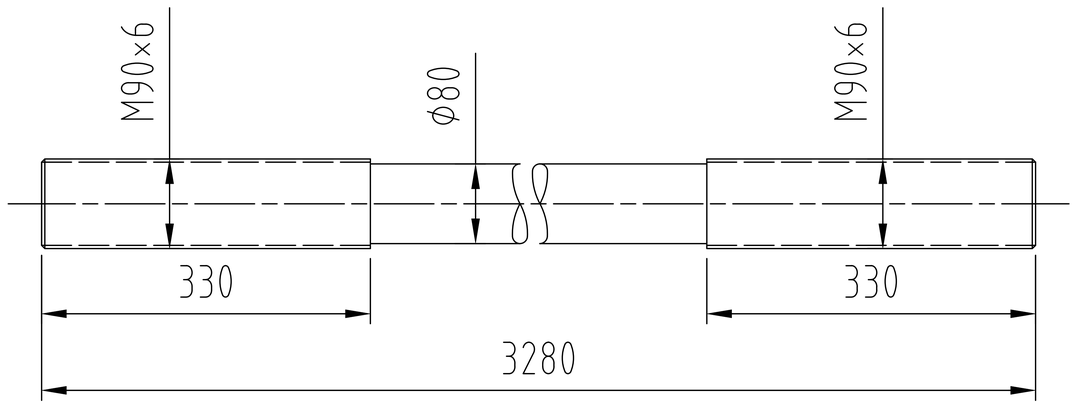

Technical requirements of rods with forged eye end:

1. Tie rod the following mechanical properties:
   Upper yield strength≥355MPa, Tensile strength≥470MPa,
   Percentage elongation after fracture ≥22%,
   Percentage reduction of area ≥50%,
   Impact strength KV2 (−20°C) ≥34J;
2. The minimum theoretical yield load is 1784KN, and the minimum theoretical breaking load is 2362KN;
3. The threads is painted by oil, the other is painted by zinc epoxy primer, the thickness above 60um;

No.	Code	Name	Qty	Material	Remark
3	GLG355-80-03	Rod1	1	Grade 355	
2	GLG355-80-02	Anchor plate	2	Q355B	
1	GLG355-80-01	Nut	4	Grade 355	

Noted			Document		Date			GLG355-80-00
Design			Standard		20/6/9	NO.	Weight	Scale	φ80 Tie rod
Checked							195kg		CHENKANG MACHINE